# Standards and Metrology for Reflective LCDs

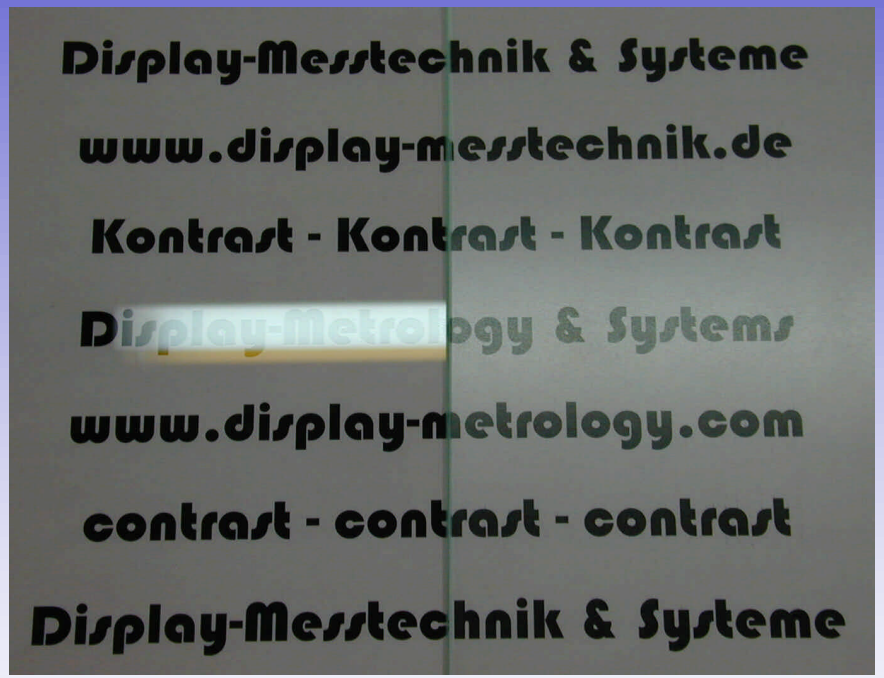


Michael E. Becker
Display-Metrology & Systems

# Standards and Metrology for Reflective LCDs

- Metrology Standards for (reflective) LCDs
  - Who needs them and why ?
  - Review of Existing Standards
  - De-facto Metrology for Reflective LCDs
- Illumination Geometries & Terminology
  - Set of basic geometries
  - Specification of illumination
  - Directional, conical illumination
  - “Diffuse” illumination
- Two Novel Device Concepts
  - Display - Dome: Flexible Illumination
  - Display - Meter: Scanning of Viewing-Cone
- Summary and Conclusions

# Motivation: Apples & Oranges

## ? Why metrology standards ?

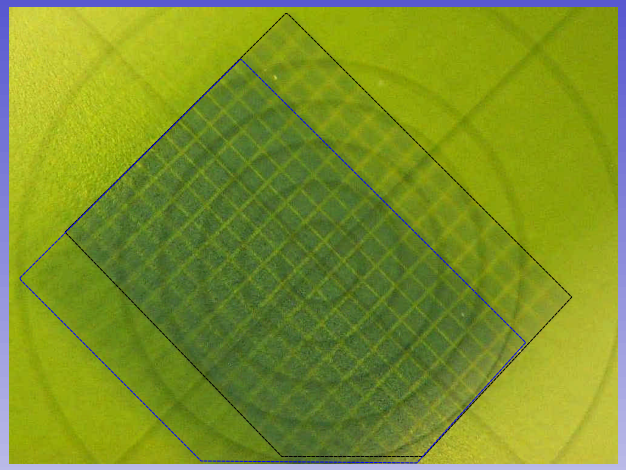

Contrast-ratio of reflective STN-LCD

Measuring Setup 1: $C_R = 3$

**???**

Measuring Setup 2: $C_R = 12$

Both setups are performing properly

**Missing specifications of ...**

Illumination:
- Geometry (angular and lateral distributions)
- Spectrum, stability, ...

Detection:
- Size and location of field-of-view (measuring spot)
- Direction of measurement (viewing-direction)

**➲ To make product specifications comparable !**

# De-facto Metrology for reflective LCDs

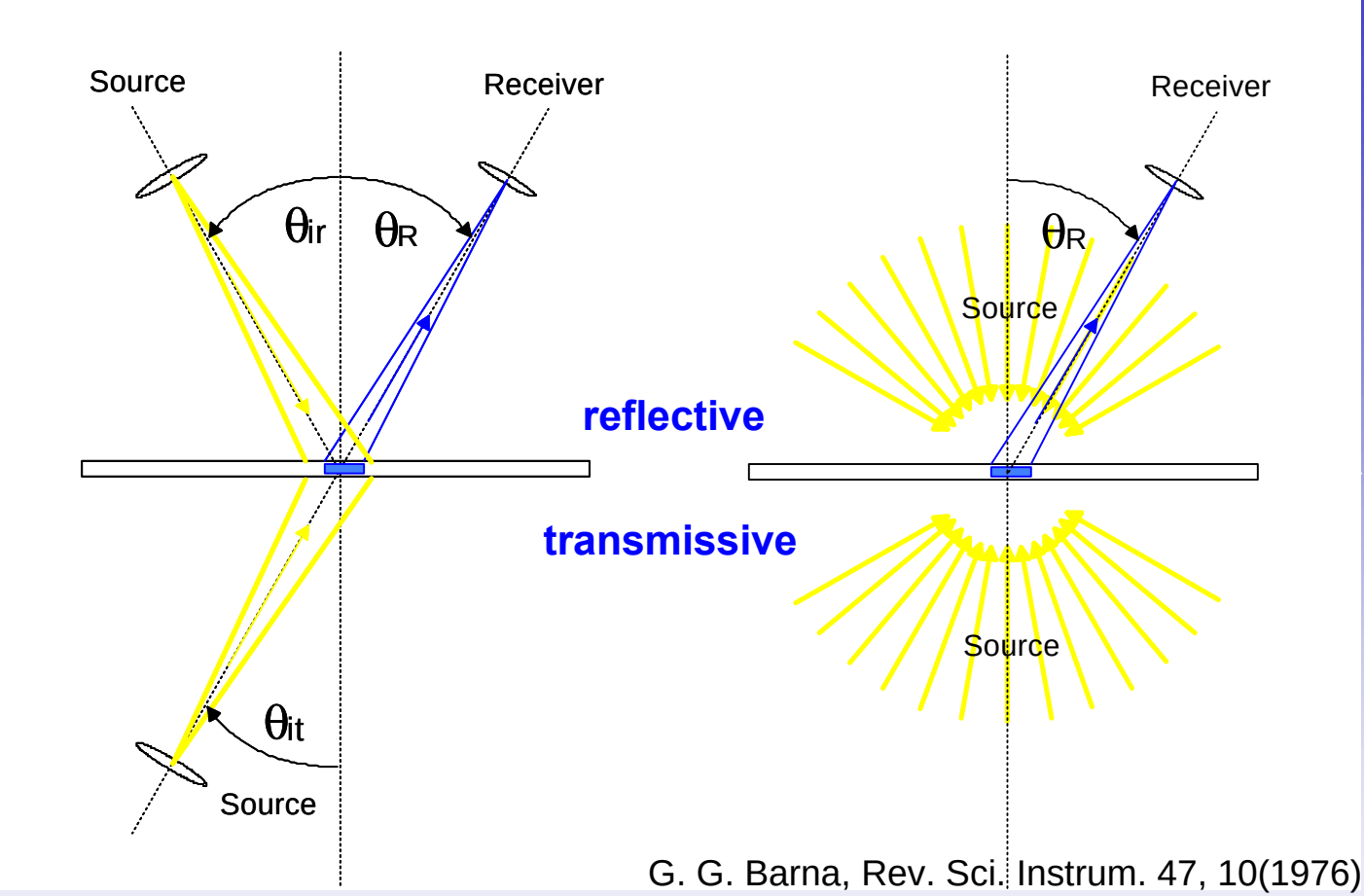


G. G. Barna, Rev. Sci. Instrum. 47, 10(1976)

**Source at direction $q_i$**

$\theta_{ir} + \theta_R = 30°$ ($\theta_{ir} \neq \theta_R$) reflective

$\theta_{it} = \theta_R$ transmissive

➲ **scanning of VC not possible !**

**Light incidence from large solid-angle**

(e.g. $\theta_{max} = 70°$)

➲ **scanning of VC possible !**

## Who needs metrology standards ?

- **Manufacturer of LCDs**
- **Manufacturer of Components for LCDs**
  (e.g. LC-Material, Polarizers, Retarders)
  - Research and Development
  - Quality Control and Assurance
  - Product Specification (⇨Data Sheet !)
- **Manufacturer of Electronic Devices**
  (i.e. System Integrator / OEM)
  - Incoming Inspection
  - Evaluation and Rating of the Final Product
- **Public Health & Safety Institutions**
- **Test Houses**
  - Assurance of Minimum Ergonomic Performance

# Metrology Standards for LCDs

- **IEC SC47/WG2 - Documents 61747- N:**
  *Transmissive LCDs (cells, modules, "monochrome", ...)*
- **IEC 61966 - 4** Multimedia systems and equipment – *Colour measurement and management – Part 4: Equipment using liquid crystal display panels*
- **Electronics Industry Association of Japan**
  EIAJ ED-2522, ED-2511, ... LCDs
  EIAJ ED-2523 **MM Reflective LCDs**

**VESA "Flat Panel Display Measurements Standard"**

**most valuable well founded source of information**

**Dr. Kelley's Seminars on Display Metrology**

# IEC Standards for LCDs

## IEC SC47 - Flat Panel Displays

## WG2 - Document Series 61747

1 Generic Specifications
2 Terminology and Letter Symbols
3 Sectional Specifications, Blank Detail Specifications
4 Essential Ratings and Characteristics
5 Environmental Endurance ..., Visual Inspection
**6 Measuring Methods (MM)**

- MM for Matrix-type LCD-modules - transmissive
  (CD for voting in preparation)

- **New Work Item: MM for Reflective LCDs !**

# Metrology Standard for Reflective LCDs

## Clear identification of how to measure which quantities

◆ Detailed **characterization of the electro-optical properties** versus viewing-direction (e.g. BRDF, spectra and other data as required e.g. for subsequent numerical simulation)

◆ Basis for prediction of the **visual performance** in real application situations (i. e. over a wide range of different illumination situations)

◆ Testing the conformity with **product specifications** (i.e. acceptance screening) and/or **minimum performance requirements**

➲ **Reproducibility**
Results must not depend on instrumentation, location, time, operator, etc.,

Method and setup must be **robust** (= insensitive to parameter variations)
Results must be **unambiguous** and **meaningful** (.. human visual system)

# Illumination Conditions

Indoor lighting
- Fluorescent lamps
- Incandescent lamps
- other sources

~ kcd/m²

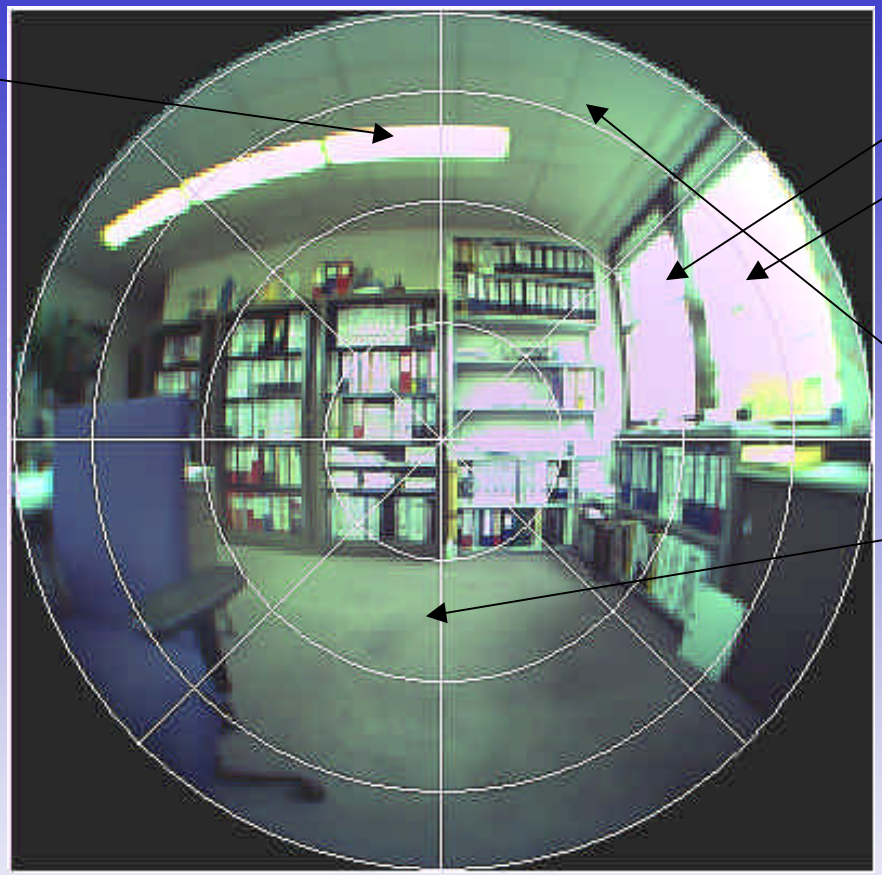

Daylight
~ 10 kcd/m²

Background
(floor, ceiling)
~ 100 cd/m²

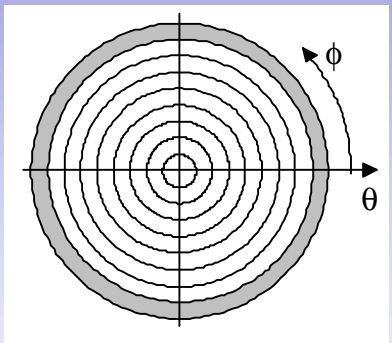


➲ **Unlimited number of conditions for illuminating displays**

**Sources differ in**
- **geometry:** location (direction), extension (size)
- **emission:** intensity, spectrum, temporal fluctuations

# Specifying Illumination Conditions

## Illumination as “seen” from the measuring spot

Contour-line representation in a polar coordinate system with $\theta$, $\phi$

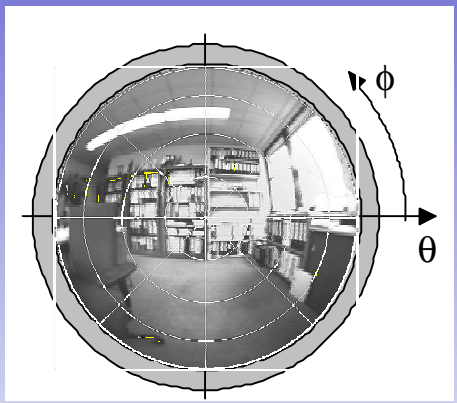


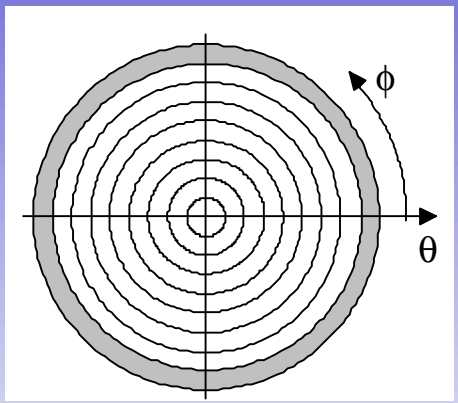


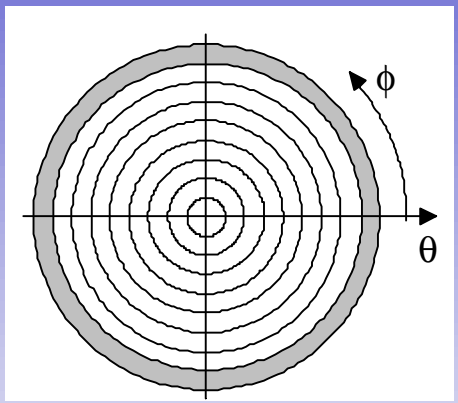


- Intensity and chromaticity vs. direction of incidence, e. g.

Luminance = f ($\theta$, $\phi$) $\Delta u' = f(\theta, \phi)$ $\Delta v' = f(\theta, \phi)$

$\Delta$ with respect to a reference direction / source spectrum

- Specification of all geometrical details of illumination setup

# Basic Illumination Geometries

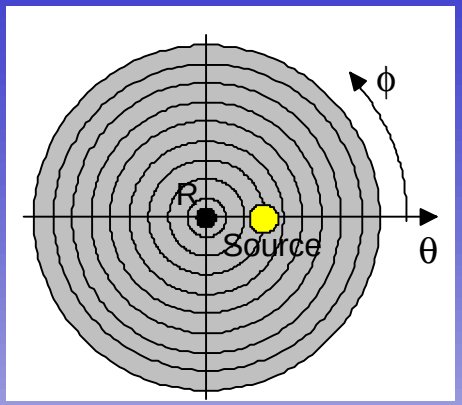


**Directional source S and receiver R**

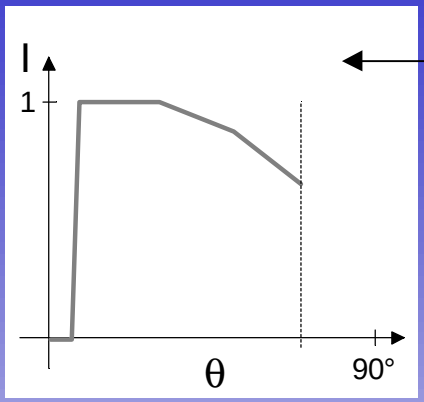


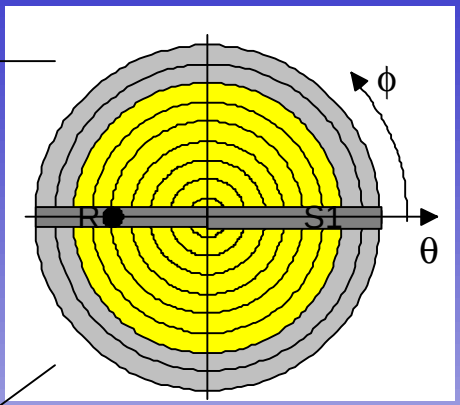


**Multi-directional illumination**
with gloss-trap $S_1$ (spex)

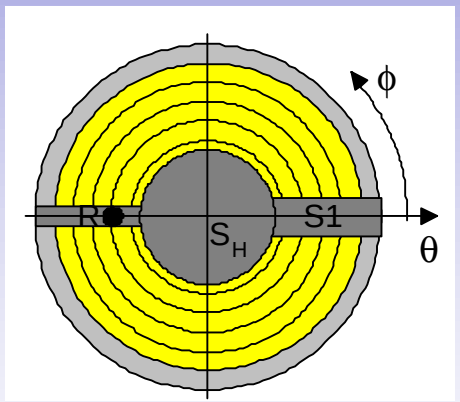


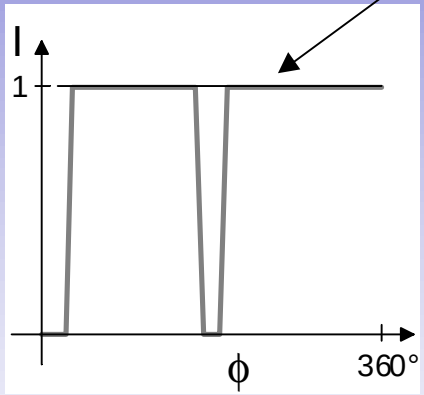


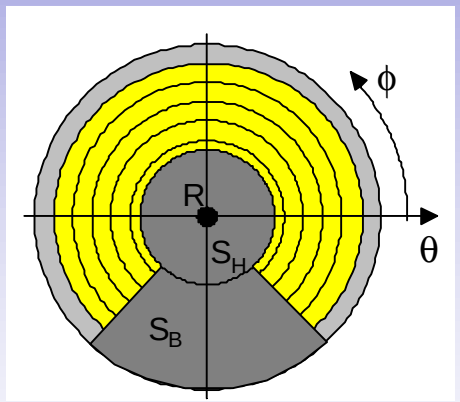


**Multi-directional illumination**
with head-shadow $S_H$ and gloss-trap $S_1$
(suppression of haze included)

**Multi-directional illumination**
Observer-shadow (head & trunk)
Normal observation

# Illumination Terminology 1

**Directional illumination** with (quasi) collimated (parallel) beam:

max. +/-5° deviation from optical axis (e.g. CIE No. 38, 1977)

i.e. $\operatorname{atan}(r_{ms} + r_s) / |d| < 5°$

Intensity across beam at measuring spot and other locations ?

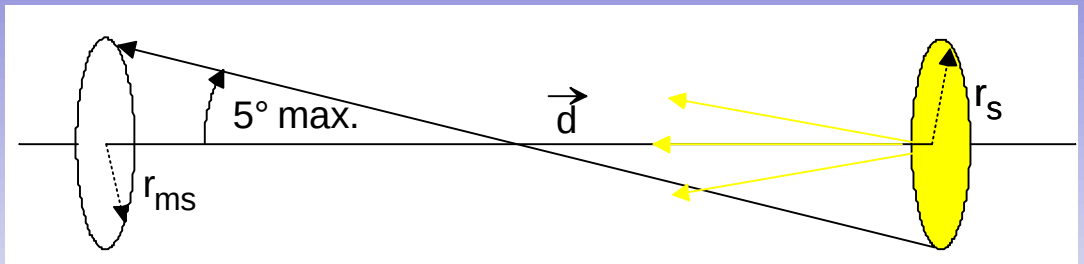


Measuring-spot Source area

*d* direction of illumination, source at distance |d|

$r_{ms}$ radius of measuring-spot (field of view)

$r_s$ radius of source (directionally uniform emission)

$r_s / |d| \rightarrow \infty$ “point source”

# Illumination Terminology 2

**Conical illumination**

extended source, illumination from a solid angle (cone) $\Omega$

$$I = d\phi / d\omega = f(\theta) = \text{constant ?}$$

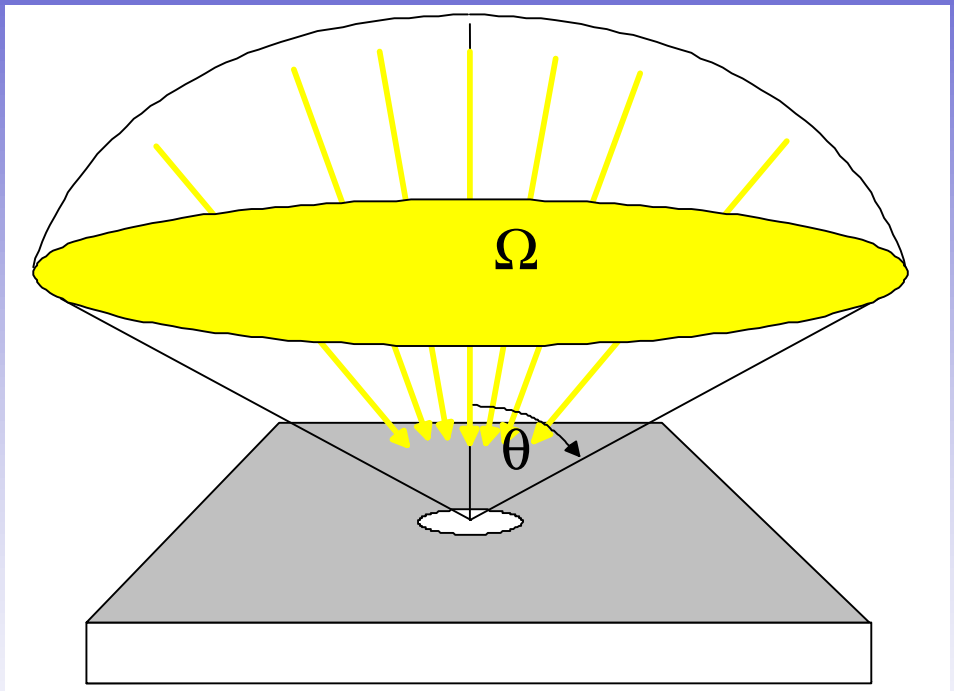


$\Omega \rightarrow 2\pi$ *hemispherical* illumination

$\Omega \rightarrow 0$ *directional* illumination

# Illumination Terminology 3

**”Diffuse” (multi-directional) illumination**

$\Omega / \theta_{max} = 2\pi / 90°$ ?  $I = d\phi / d\omega = f(\theta)$ ?

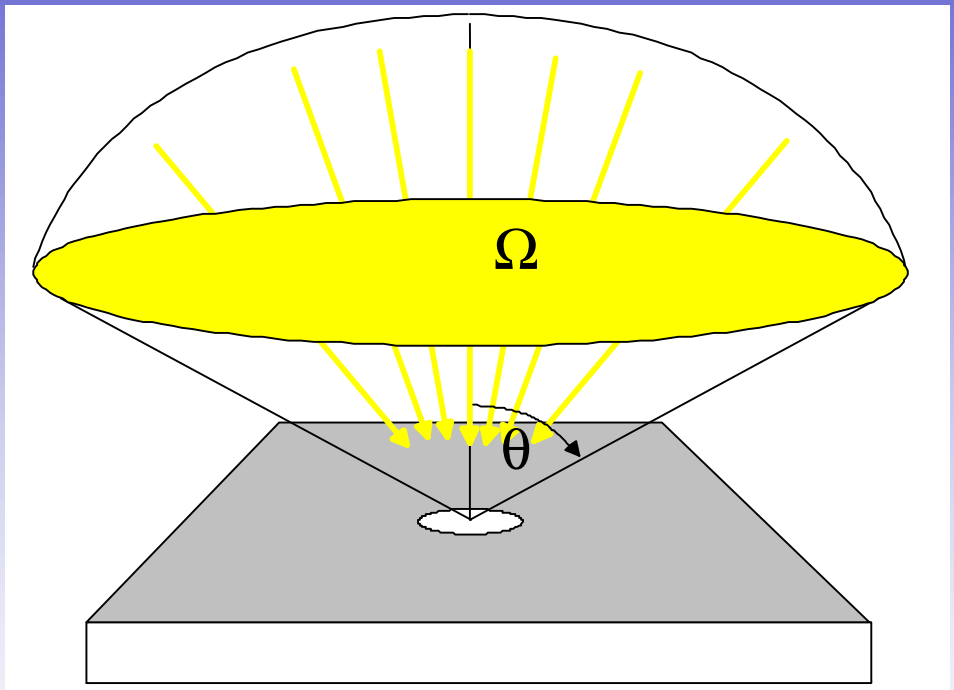


$\Omega = 2\pi$ *hemispherical* illumination

$I = f(\theta) = \text{constant} \rightarrow$ *isotropically diffuse illumination*

# Display-Dome

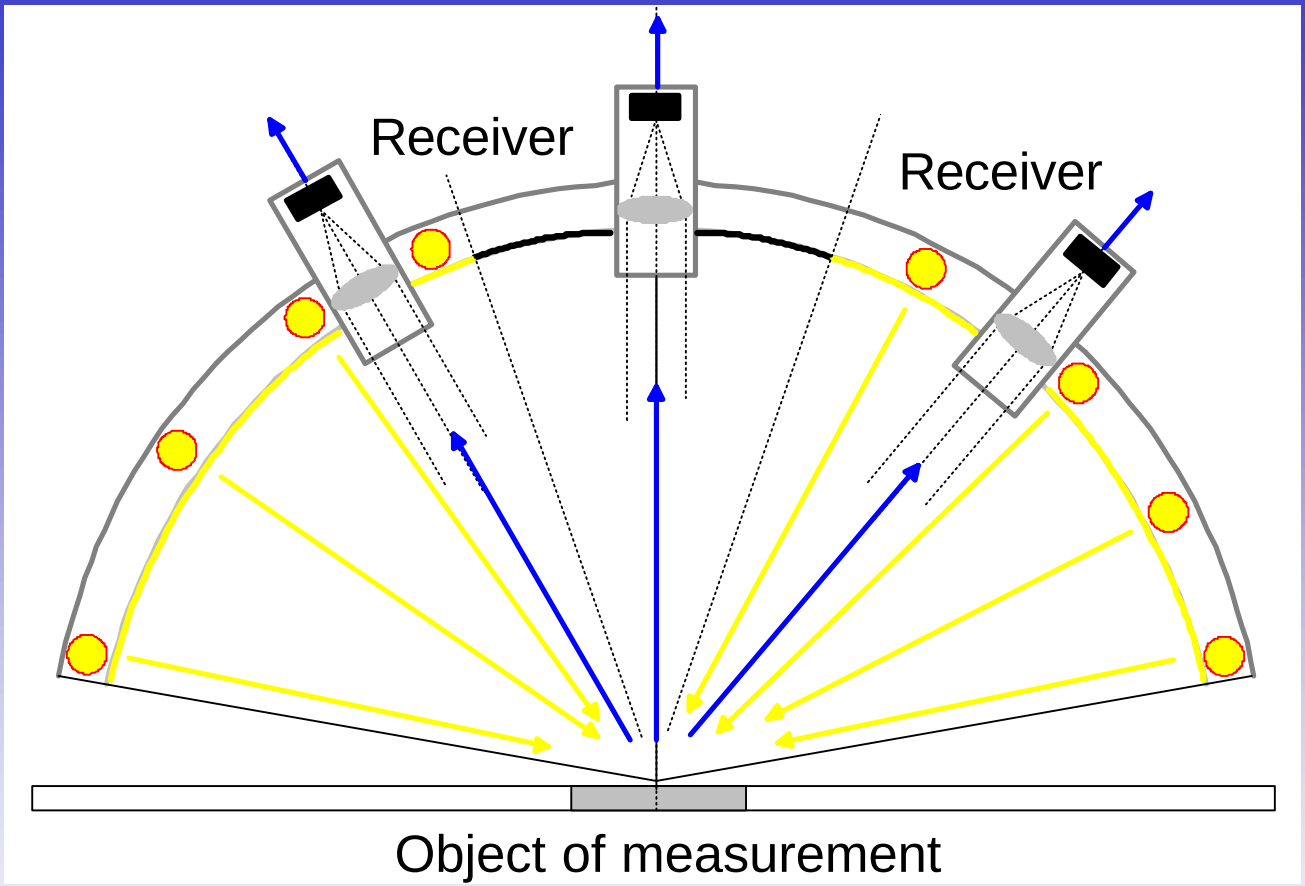


**Illumination**

- Controlled light & shadow
- Various source sizes and locations
- Various intensities and spectra

**Detection**

- Measurement at distinct directions (up to 16 directions)
- Spectral and fast photometric

# Display-Meter

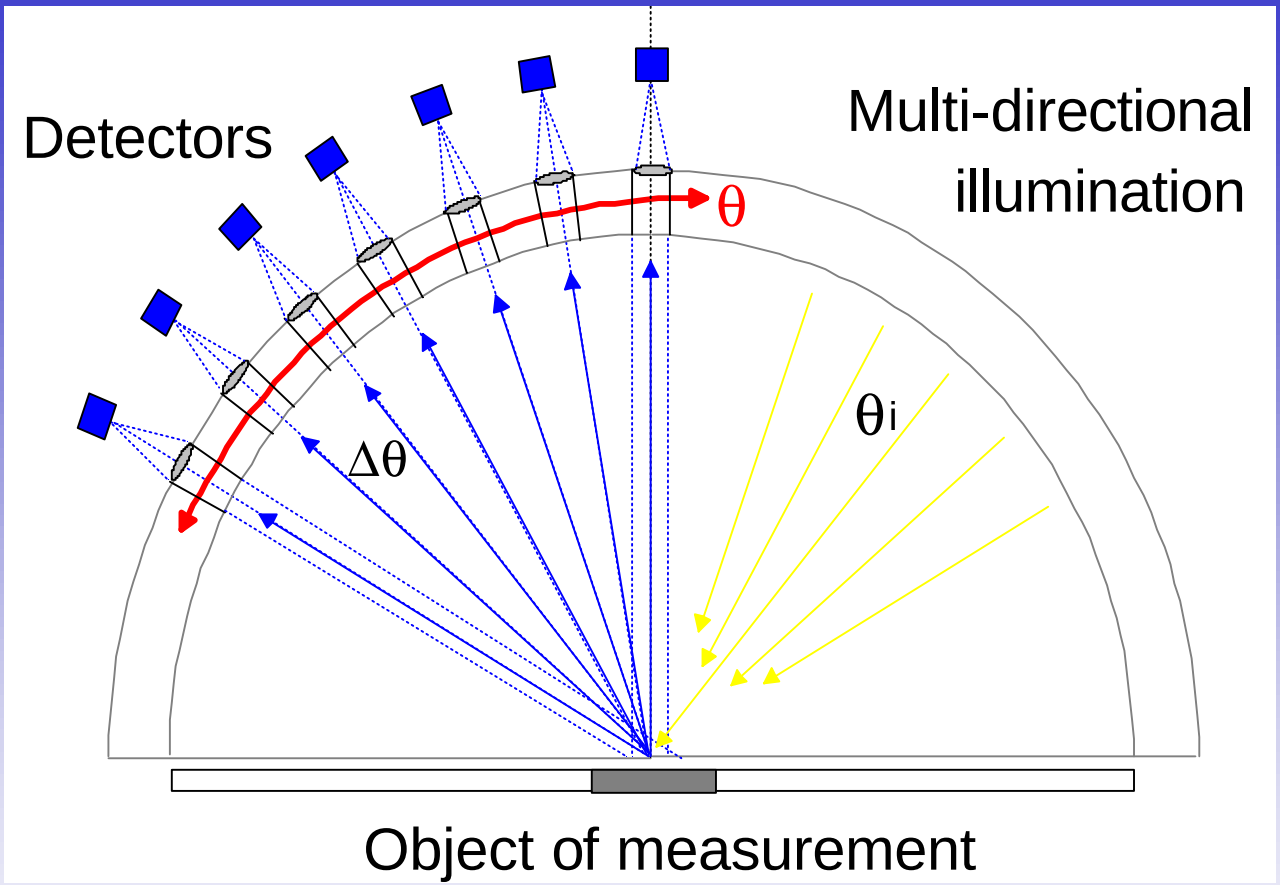


**Illumination**

- Multidirectional illumination
- Controlled shadows (e.g.observer)
- Gloss-trap (adjustable width)
- Various intensities and spectra

**Detection**

- Scanning of viewing-cone
  (0° up to 70° with $\Delta\theta = 5° \Rightarrow 15$ channels)
- Spectral and fast photometric detection
- High-resolution BRDF (optional)

# Summary & Conclusions

- We have reviewed the currently existing metrology standards for LCDs and illustrated the need for MM for reflective LCDs
- The existing metrology for reflective LCDs lacks specification of the setup and its details. The evaluations cannot be compared.
- Appropriate specification of the measuring setup (illumination and detection) and a common terminology should reduce confusion
- We have introduced a versatile and flexible approach for realization of a wide range of illumination geometries with simultaneous detection of the spectrum of reflected light
- We have introduced a novel apparatus for fast scanning of the viewing-cone of reflective displays with spectral and fast photometric detection and optional BRDF evaluation